USER MANUAL

Thank you for choosing Better Bathrooms.
Please read this manual before installing your product
and keep for future reference.

better bathrooms

INSTALLATION INSTRUCTIONS OF TOPMOUNT STAINLESS STEEL SINKS

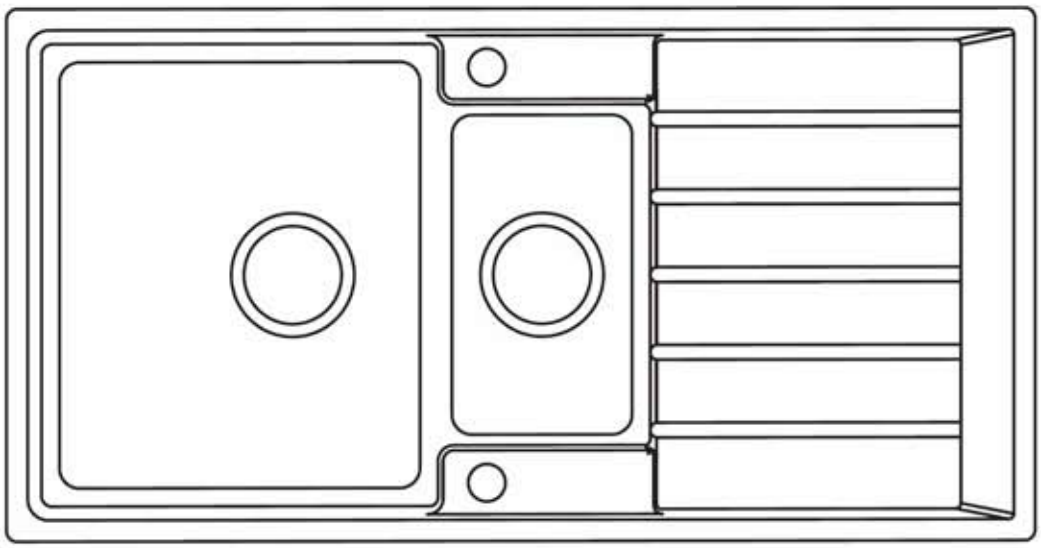

Note:Image may differ from actual product design.

- **Single-person assembly**
- **We always recommend using a professional plumber to install your product**

V1-01/07/2026

Congratulations on your purchase

And welcome to our growing gang of savvy shoppers

We're on a mission to bring you extraordinary bathroom products, for less. From modern to traditional style ceramics, plus the gorgeous fixtures, fittings and furniture to match. So, you can fall in love with your space every single day.

As one of the UK's largest independent bathroom stores, we've received countless awards; including the National Business Awards UK, the Digital Entrepreneur Awards and being placed on The Sunday Times Fast Track 100.

We hope your new product goes above and beyond your expectations. However, should any problems occur, please:

log in to your account and contact our customer services team via your self-serve portal -betterbathrooms.com/CustomerAccount/Login

contact us via betterbathrooms.com/content/contact-us

Important information

Please read these instructions thoroughly and retain for future reference
Always check for pipes and cables before drilling

Component including

1. Sink
2. Strainer(s)
3. Topmount fixing clips(Number of clips varies depending on product as below)

   BELLASB860(10 sets), BELLA15B970(10 sets), BELLALDB1160(12 sets), BELLARDB1160(12 sets)
4. Sealing strip
5. Tap hole cover
6. Cutout template

* The plumber can easily determine the cutout size as per the method mentioned in below instructions.
* In case a sink comes with cardboard sleeve, the plumber can also trace the cutout line according to the cutout guide line pre-marked on the cardboard sleeve.

Installation Instructions

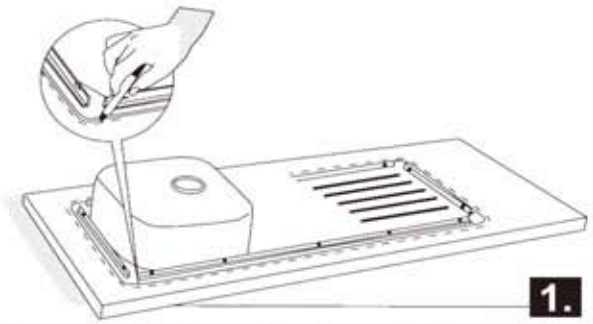

Place the sink upside down in the position where it is to be installed,and trace the outline of the sink on the bench top with a pencil.

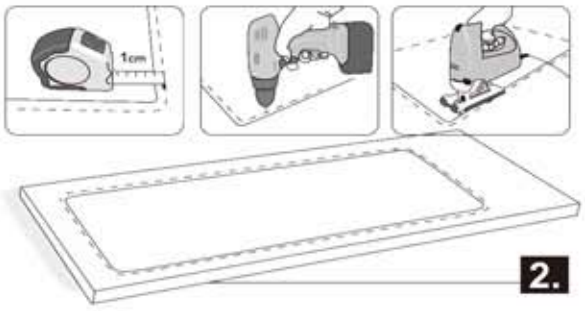

Draw another line 10 mm inside the first line. cut a hole in the bench top following this second, inner, line.
*In case a sink comes with cardboard sleeve, the plumber can also cut the mounting hole according to the cutout guide line pre-marked on the cardboard sleeve.

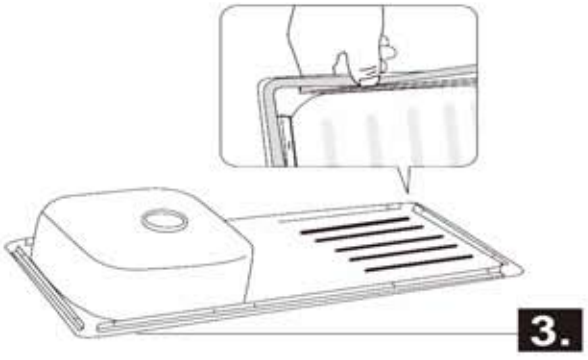

Adhere the sealing strip aroundthe under side of the edge of the sink,being careful to lay it smoothly(without ridges).

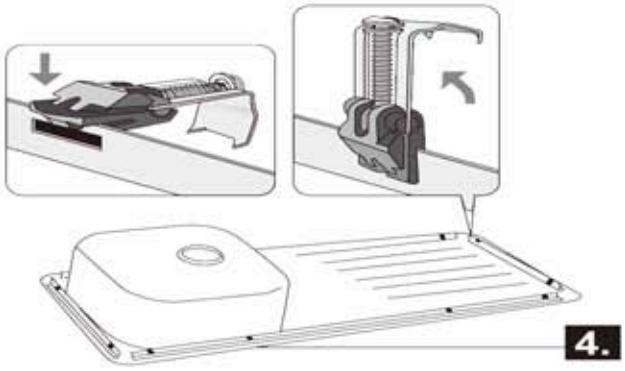

Place the fixing clips vertically and pull them up to lock into theirhorizontal position.

* Number of clips varies depending on product.

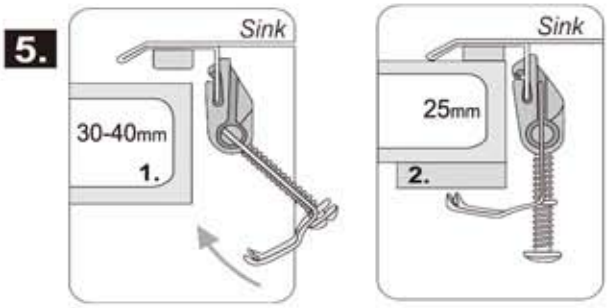

The fixing clips are designed to install on worktops with thickness 30-40 mm.
(1). If the worktop is thinner, insert wooden wedges between the worktop and the clips so as to tighten all clips.
(2).After placing two at each corner of the sink, place the rest evenly spaced around the perimeter of the sink.

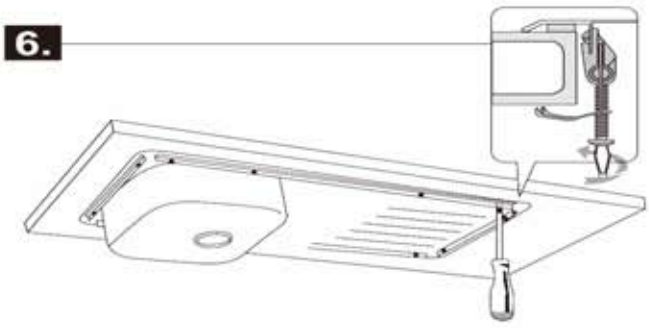

Tighten the screws of the fixing clips with a screwdriver to secure the sink in place.

Maintenance, Care & Cleaning

By following these maintenance tips, you can maintain the finish of your Coloured stainless steel sink for longer:

• Scratching on the surface of sinks occurs as a result of normal use over time. Scratches cannot be removed, but they will fade in appearance over time. Cleaning on a regular basis is the best form of maintenance. Cleaning a little bit on a regular basis is preferable to cleaning a lot on a sporadic basis.

• The best way to prevent future problems is to keep the sink clean and dry. After each use, rinse and towel dry the sink to avoid major cleaning and to keep it shiny and free of water spots.

• Make sure there's no standing water in the sink, as this can lead to mineral deposits. The appearance of your sink can be affected by the quality of your water, which varies from household to household.

• When cleaning your sink, choose the gentlest method that will get the job done. When using household cleaners such as detergents or bleaches, use extreme caution.

• Use cleaning products specifically designed for stainless steel and follow the manufacturer's instructions to treat grime and mineral deposits that may accumulate over time.

• To avoid water spotting, always rinse the sink after using a cleaning agent and wipe it dry.

• Do not clean your sink or any utensils in the sink with metallic scouring pads or steel wool pads. They will not only scratch the sink, but will also leave a residue of small iron particles on the surface, which may or may not be visible, but will almost certainly cause rusting and corrosion.

• Do not leave any cast iron or mild steel cookware or implements in the sink for long periods of time. Surface corrosion and sink staining are caused by the presence of iron and moisture in stainless steel.

• Never leave wet sponges or cleaning pads in the sink overnight because they will trap water and stain or discolour the sink surface. Stainless steel's unique properties are determined by how much of the surface is exposed to the atmosphere.

• We do not recommend using chlorine bleach in your stainless-steel sink because chlorine will eat away at the protective layer that keeps stainless steel from rusting. Drain cleaners that contain sulphuric or hydrochloric acid will attack the sink as well.

• In extreme cases, repeatedly pouring boiling hot water into coloured sinks can cause crazing and cracking. As a result, we advise caution when releasing hot water directly onto the sink surface for long periods of time.

For more information

- visit betterbathrooms.com
- email customerservices@buyitdirect.co.uk
- call 0330 390 3062
- write to Trident Business Park, Neptune Way, Huddersfield, HD2 1UA

better bathrooms

Part of the BuyItDirect Group